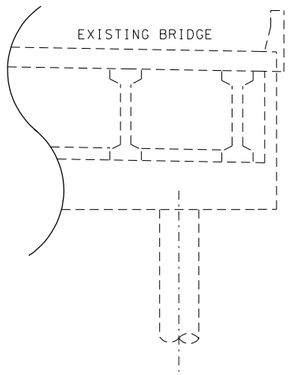

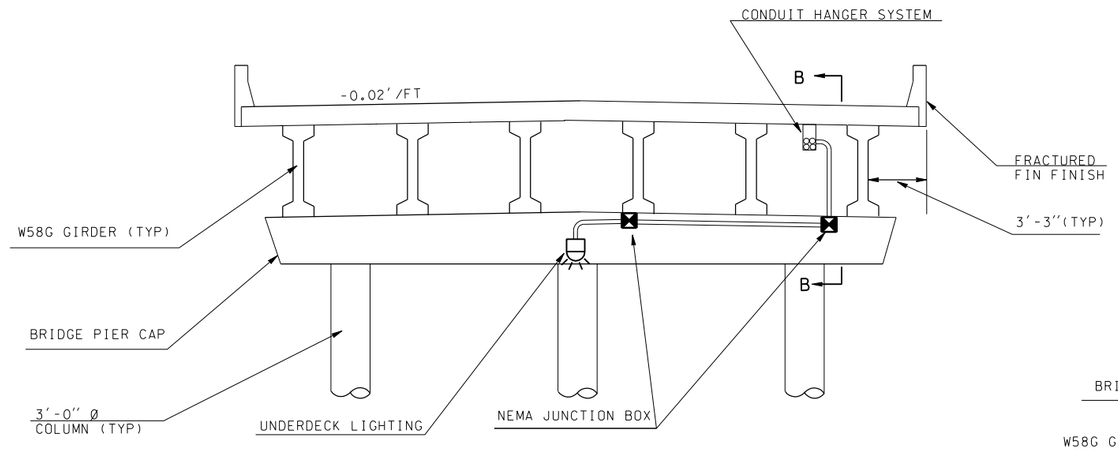

SECTION A-A

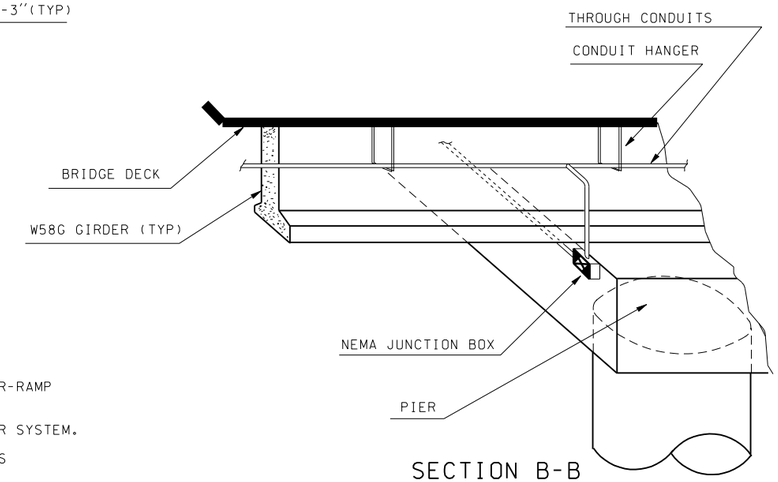

SECTION B-B

GENERAL NOTES

1. INSTALL A TYPE 2 JUNCTION BOX AT THE EDGE OF PAVEMENT OF EACH END OF THE BR-RAMP BRIDGE STRUCTURE.
2. EXTEND CONDUIT, ENTERING THE BRIDGE STRUCTURE THROUGH PIER 1, TO THE HANGER SYSTEM.
3. INSTALL LUMINAIRES ON THE BRIDGE CAPS OF PIER 2 AND PIER 3 AND RUN CONDUITS THROUGH NEMA 4X JUNCTION BOXES TO THE LUMINAIRES.
4. END CAP ALL UNUSED CONDUITS IN THE JUNCTION BOX AT EACH END OF THE BRIDGE STRUCTURE.

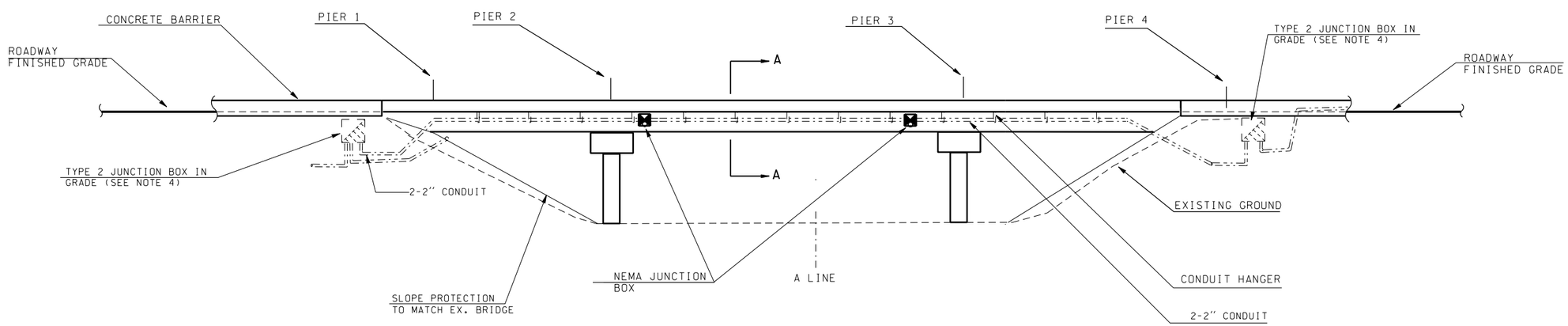

DETAIL C

(UNDERDECK STRUCTURE MOUNTED LUMINAIRE)

NOT TO SCALE

FILE NAME	S:\414126\Electrical\MASTER_FILES\DETAILS Homepage\illum.dgn						
TIME	02:35:16 PM			REGION NO. 10	STATE WASH	FED.AID PROJ.NO.	
DATE	04/07/2005			JOB NUMBER			
DESIGNED BY							
ENTERED BY							
CHECKED BY		NEW SHEET PLACEMENT	4/15/03	JH	CONTRACT NO.	LOCATION NO.	
PROJ. ENGR.		DELETED TEXT (SEE SHEET..)	5/28/99	JH			
REGIONAL ADM.		REVISION	DATE	BY			

P.E. STAMP BOX DATE

P.E. STAMP BOX DATE

Washington State Department of Transportation

ILLUMINATION DETAILS

ENGLISH

PLOT6

5.06E

SHEET OF SHEETS